Current part is item (7) on diagram. Available at www.oshkoshequipment.com

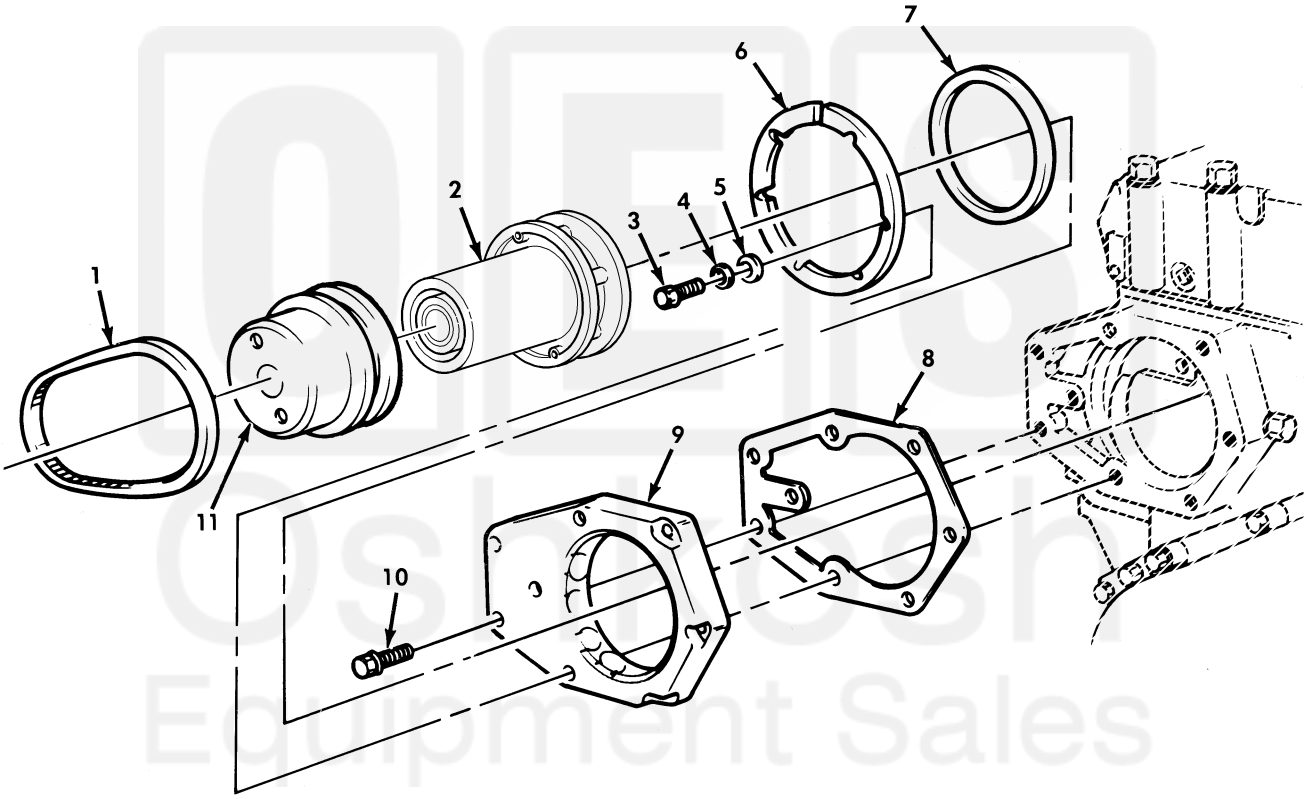

Figure 88. Water Pump Assembly, Seals, Belt, and Mounting Hardware.

Current part is item (7) on diagram. Available at www.oshkoshequipment.com

Current part is item (7) on diagram. Available at www.oshkoshequipment.com

(1) ITEM NO	(2) SMR CODE	(3) NSN	(4) CAGEC	(5) PART NUMBER	(6) DESCRIPTION AND USABLE ON CODE (UOC)	(7) QTY
					GROUP 0504 WATER PUMP	
					FIG. 88 WATER PUMP ASSEMBLY,SEALS, BELT,AND MOUNTING HARDWARE	
1	PAOZZ	3030-00-404-3061	15434	202340	BELT,V.....	1
2	PAOZZ	2930-00-404-3059	15434	AR51360	PUMP,COOLING SYSTEM.....	1
3	PAOZZ	5305-00-269-3241	80204	B1821BH038F175N	SCREW,CAP,HEXAGON H.....	6
4	PAOZZ	5310-00-637-9541	96906	MS35338-46	WASHER,LOCK.....	6
5	PAOZZ	5310-00-486-2505	15434	108330	WASHER,FLAT.....	6
6	PAOZZ	5365-00-138-8221	15434	193431	RING,WATER PUMP.....	1
7	PAOZZ	5330-00-106-6369	15434	130240	GASKET PART OF KIT P/N 3011472.....	1
8	PAFZZ	5330-00-106-6370	15434	130226	GASKET PART OF KIT P/N 3011472.....	1
9	PBFZZ	2930-00-408-9404	15434	130227	SUPPORT,PUMP,WATER.....	1
10	PAFZZ	5305-01-130-6100	15434	3010594	SCREW,CAP,HEXAGON H.....	2
11	PFOZZ	3020-00-404-2959	15434	AR51410	PULLEY,GROOVE.....	1

END OF FIGURE

Current part is item (7) on diagram. Available at www.oshkoshequipment.com